Anti-windup self-adaptive PI-Fuzzy speed controller for brushless DC motor

YAMINA JOUILI, RADHIA GARRAOUI, MOUNA BEN HAMED, LASSAAD SBITA
PEESE (Processes, Energetics, Environments & Electrical Systems) research laboratory LR18ES34
National Engineering school of Gabes, Dept. Electric-Automatic, University of Gabes, Gabes, Tunisia
Email: jouiliyamina@gmail.com
Email: radhiagarraoui@gmail.com
Email: benhamed2209@yahoo.com
Email : lassaad.sbita@gmail.com

2022 IEEE International Conference on Electrical Sciences and Technologies in Maghreb (CISTEM) | 978-1-6654-5168-0/22/$31.00 ©2022 IEEE | DOI: 10.1109/CISTEM55808.2022.10044008

***Abstract*— this work presents a proposal for an anti-wind up self-adaptive PI-Fuzzy controller with back calculation method for brushless DC motor. In order to evaluate the performances of this proposed controller, we will adopt a simulation under various operating conditions such as variable reference speed and load deviation.**

The proposed controller is analyzed and compared to the classic proportional-integral (PI) controller and back calculation PI anti-windup controller. Rise time, settling time, steady state error, and overshoot are taken into consideration. This system is simulated by the Matlab/Simulink software. Obtained results show the behavior of the brushless DC motor under the proposed operating conditions. The effect of the proposed controller on the engine response is already well shown.

Keywords*— *Anti-windup self-adaptive PI- back calculation PI anti wind up controller- Brushless dc motor.

1. INTRODUCTION

Today, electric rotary actuators play a very important role in commercial and residential applications. For a long time, the DC motor is considered among the most used actuators. However, its main drawback remains the mechanical commutator which causes brush wear and rotor losses, the susceptibility of the commutator, the consequent need for maintenance, less robustness and the need for a more expensive electronic control [1-2].

Thanks to their favorable electrical and mechanical properties, BLDC motors are found in several segments, mainly in variable speed operation such as unmanned aerial vehicles (UAVs), robotics, electric vehicles and electromechanical actuation systems [3-2] and [15].

Brushless DC motor (BLDC) is known as synchronous motor with the electrical commutation scheme. BLDC motors have become the best choice due to continuous improvements in high energy permanent magnet materials, power semiconductors and digital integrated circuits.

Therefore, the trapezoidal three-phase BLDC (six-state switching) control system provides precise control that reduces noise and replaces the commutator (brushes). It provides DC voltage suitable for DC bus or high voltage step-up converter. Thus, a BLDC motor drive has a high power-to-mass ratio, with less maintenance and high-speed capabilities [3-4] and [8].

Various control schemes are created for closed-loop speed regulation, such as Proportional Integral Derivative PID,
PI optimized by Genetic Algorithm (GA), Fuzzy Logic Controller (FLC) and Adaptive Fuzzy Logic controller [34], [5], [3] and [13-15].

PI controllers are widely used in industrial control systems and various other applications require modulated control due to their simplicity of tuning and regulation. Conventional PID controllers become inefficient, due to unstable conditions, higher order, complexity and nonlinear system without mathematical model and systems with uncertainties [4] and [11].

To overcome these drawbacks, research studies focus on adaptive control, such as an adaptive PID neural network controller is developed in [3]. Therefore, the Particle Swarm Optimization (PSO) algorithm was used for the controller design. However, one of the main drawbacks is that the PSO algorithm takes longer to initialize the weight of the PID neural network.

On the other hand, self-adaptive PID tuning fuzzy logic controller has been proposed for speed control by several researches as in [10-12] and [15].Thus, fuzzy logic control is used in online gain tuning. Moreover, intelligent control techniques are applied on dynamic systems, ensuring high robustness performance with better steady-state response, reduced rise and settling time and low overshoot.

In this study, all control performance factor parameters are measured and compared for the proposed controllers, namely, anti-windup self-adaptive Fuzzy PI with back-calculation method.

The paper is set as follows: Section 2 describes mathematical models of the BLDC engine, then the proposed controllers are explained in Section 3. The simulation results are illustrated and discussed in the next section 4. Section 5 concludes the work.

2. BRUSHLESS DC MOTOR DRIVE

A BLDC motor is powered by a DC power supply via switching devices. The phase current, whose waveform is usually rectangular, is synchronized with a trapezoidal counter-electromotive force [8]. The full structure of the BLDC motor driven by a three-phase inverter as in Fig1.

The following assumptions are made

- All the stator phase windings have equal resistance per phase;
- Constant and mutual inductance;
- Power semiconductor device are ideal;
- Iron losses are negligible;
- The motor is unsaturated.

Mathematically, the brushless DC motor model is similar to that of a conventional DC motor. The stator phase currents are a

Authorized licensed use limited to: Rajshahi University Of Engineering and Technology. Downloaded on April 24,2026 at 19:24:38 UTC from IEEE Xplore. Restrictions apply.

balanced system. The outputs voltages BLDC motor can be described as following matrix equations [6-7] and [9]

$$\begin{bmatrix} V_a \\ V_b \\ V_c \end{bmatrix} = \begin{bmatrix} R & 0 & 0 \\ 0 & R & 0 \\ 0 & 0 & R \end{bmatrix} . \begin{bmatrix} i_a \\ i_b \\ i_c \end{bmatrix} + \begin{bmatrix} L-M & 0 & 0 \\ 0 & L-M & 0 \\ 0 & 0 & L-M \end{bmatrix} . \frac{d}{dt} . \begin{bmatrix} i_a \\ i_b \\ i_c \end{bmatrix} + \begin{bmatrix} e_a \\ e_b \\ e_c \end{bmatrix} \quad (1)$$

Where; Va, Vb, and Vc are the three stator phase voltages of brushless dc motor drive, R, L and M represent the stator resistance, self-inductance and mutual inductance of winding respectively. ia, ib, and ic are the three phase current of BLDC motor
Mechanical movement equation can be described as:

$$T_{em} = \frac{1}{J}\frac{d\omega_m}{dt} + \beta.\omega_m(t) + T_L(t) \quad (2)$$

With:
J: the moment of inertia (N.m.s).
β : donates the frictional constant
T_L : load torque (N).

Electromagnetic torque of three phases BLDC can be represented by back emf, three phase current and speed as follows expression:

$$T_e = \frac{e_a.i_a + e_b.i_b + e_c.i_c}{\dot{\theta}_m} \quad (3)$$

2.1. Trapezoidal control

The algorithm commutation of BLDC motor uses position detectors and an inverter to control the current in each phase winding stator. Then, only two phases of terminals are energized for each switching sequence while the third is non-energized. So, it works in six possible commutations as figure.1 [1-3] and [9]. Thus, the sequence commutation need to energized every 60° degrees and provide this information to the power devices in the inverter circuit. Fig1 consists of the model in an inner loop.

TABLE. 1. Decoder Signals based on Hall effect sensor states.

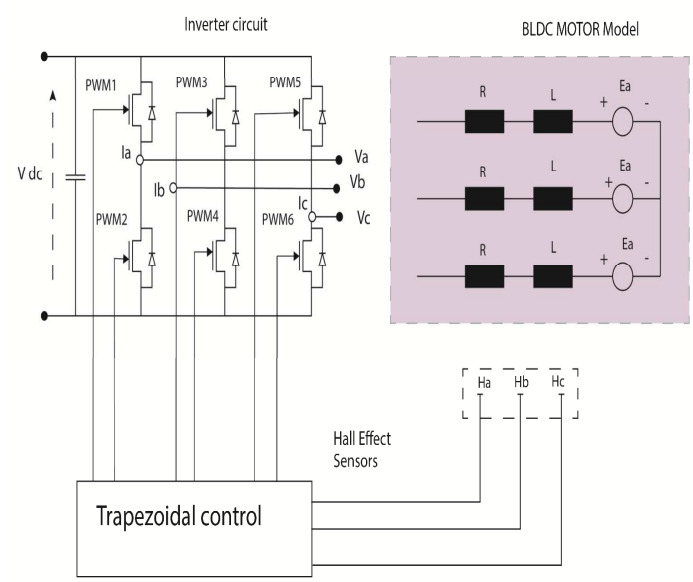

Fig.1.Brushless dc motor in inner loop

3. Controller Design of BLDC motor drive

Fig 6 consists all considered simulink model block such as, BLDC motor, DC bus, inverter device, current control block (inner loop), speed control block (outer loop) and motor measurement block.
Since; the reference current is determined form the reference torque by equation:

$$Is_{ref} = \frac{T_{ref}}{Kt} \quad (4)$$

Where, Kt represent torque constant.

3.1. Current control

Duty-cycle controlled voltage PWM technique and hysteresis current control technique are effective methods in improving the performance of current control strategies for a BLDC.

3.2 Speed control

3.2.1 PI anti wind up

Actuator saturation is among some of the practical challenges in the controller design. The effects of this saturation can range from degradation of performance to closed-loop instability.
Since the BLDC motor is a nonlinear actuator, and in order to overcome this difficulty, an interesting treatment by using an anti-winding technique was adopted. The main design goals of the anti-windup controller are to avoid overvalue in the Integrator, for example, the output will be held within a limited range when the system enters the saturation state [16-17].

Currently, the controller design for brushless DC motor speed control adopts PID and PWM modulation. In this work, only PI (Proportional, Integral) controller is used in the initial analysis and simulations for speed control.

The derivative term will not be used in closed loop because it amplifies the high frequencies. In other situations, this will have a greater effect on system response.

While the PI controller has no output saturation limiters. Back-calculation method of anti-wind-up PI controller is proposed for brushless DC motor speed control to improve the control performance of variable speed motor drive.

3.2.2 Self adaptative PI anti wind up control

Unfortunately, the gains of anti-windup PI have to be balanced to affect the transient response, such as stabilization time, overshoots, and stable state error of the oscillations.

The bad estimation of these gains leads to badly calculated control system parameters so the answers will suffer from uncertainties and disturbances, which affects the operating conditions of the brushless DC motor [4-5] .

Authorized licensed use limited to: Rajshahi University Of Engineering and Technology. Downloaded on April 24,2026 at 19:24:38 UTC from IEEE Xplore. Restrictions apply.

In this article, the second approach proposed is the anti-windup self-adaptive Fuzzy-PI.. We will have to make decisions and allow the evolution of gains Kp, Ki and Kc online.

[11-15].

The self-adaptive controller benefits from the advantages of the PI anti-reverse controller such as feasibility and ease of implementation. In addition, the advantage of fuzzy logic FLC concept, which mainly includes fuzzification, fuzzy inference rule base and defuzzification as elementary components

In this work, a fuzzy inference system with Mamdani's method is proposed , which mainly depends on the value of speed error e and its rate of change ec as inputs to the fuzzy logic BLDC motor controller.

Three outputs signals Kp, Ki and Kc are given to produce desired control, which finds the center of gravity "centroid" defuzzification method.

This method is known for its ability to improve the efficiency of the control process. In effect it weights the inputs and provides the center of all areas combined. Mathematically, the COG method will be described as the equation of Mamdani's fuzzy inference rules modeled by the max-min composition [6-7]

$$K_{p,i,c_up} = \frac{\int \mu(z).zdz}{\int \mu(z).dz} \qquad (5)$$

Where:

Kp, Ki and Kc represent updates gains, μ (z) is the amplitude of each triangle function and z says the fuzzy output signal.

The input variables to be fuzzy sets such as P (positive), PS (positive small), Z (zero), NS (negative small) and N (negative). Similarly, of outputs signals are distributed with five triangles shaped membership functions that describe by the linguistic variables VL (very low), L (low), Z (zero), H (high) and VH (very high).

Except for kc, the numbers of blurred areas which are chosen to be three, such as: S (small), M (medium) and B (large). The employed membership functions of the FL control are described in the following figures from 2 to 4:

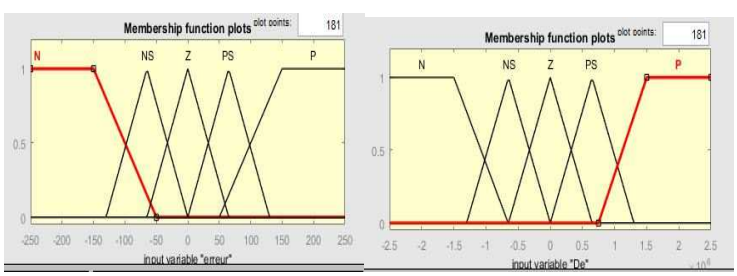

Fig.2. Error speed and rate change of error speed inputs membership functions.

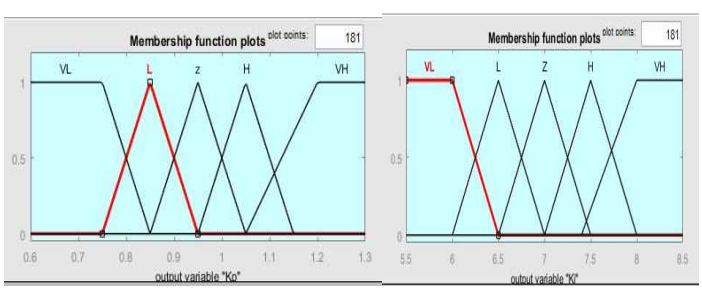

Fig.3. Distribution of the membership functions of the update of gains ,(a)Kp,(b) ki.

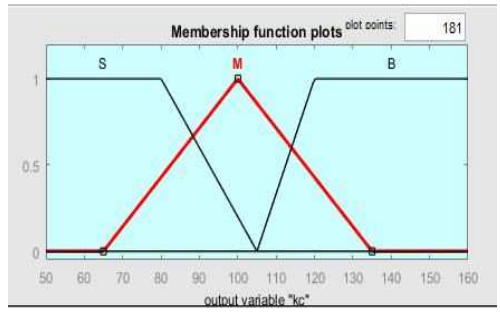

Fig.4. Distribution of the membership functions of the update of gain Kc.

Through fuzzification and fuzzy decision, the overall results are given by Tables 1(A, B and C). Which, 25 fuzzy control rules are produced. Each of them is obtained from the "IF-THEN" interference rules.

In control theory, the set of rules can be separated into four groups to achieve the logic of the proposed rules.

In Group 1: Velocity Error and Rate of Error Speed Change have zero or small, negative or positive values.

In this case, the output speed is slightly lower or higher than the set points. Therefore, small negative or positive control values are applied. As proposed, kp update values are high or very high, while ki update values are very low or low.

In group 2: the velocity error and the rate of change error of the velocity have negative or positive values.

For this group, negative control values are required for optimal operation and the process output is far below the set point. In this case, the online Kp fuzzy sets have zero or low value, but the online ki fuzzy sets have high or very high value.

In group 3: the velocity error is negative and the rate of change of the velocity error is positive or the velocity error is positive and the rate of change of the velocity error is negative, which implies that the process output is significantly higher than the set point. Therefore, a positive controller value is generated. Thus, a low or zero value is proposed for the kp update and a zero or high value for the ki update.

While group 4 is destined for fuzzy inference sets of online kc. Thus, if the velocity error is negative or small negative, the proposed kc is big or medium and medium or small in case of velocity error equal zero or positive big.

TABLES 1: TABLES DECISION OF FUZZY INFERENCE RULES FOR UPDATE GAINS, (A): FUZZY INFERENCE RULES FOR KP, (B): FUZZY INFERENCE RULES FOR KI AND (C): FUZZY INFERENCE RULES FOR KC.

(A)

	Rate change of error speed					
Speed Error	Kp	N	NS	Z	PS	P
	N	Z	H	Z	L	Z
	NS	VH	VH	H	VH	VH
	Z	VH	VH	H	VH	VH
	PS	VH	VH	H	VH	VH
	P	Z	L	Z	Z	H

Authorized licensed use limited to: Rajshahi University Of Engineering and Technology. Downloaded on April 24,2026 at 19:24:38 UTC from IEEE Xplore. Restrictions apply.

(B)

	Rate change of error speed					
Speed Error	Ki	N	NS	Z	PS	P
	N	VH	Z	H	H	VH
	NS	VL	L	L	L	VL
	Z	VL	L	Z	L	VL
	PS	VL	L	Z	L	.
	P	VH	H	Z	H	VH

(C)

	Rate change of error speed					
Speed Error	Kc	N	NS	Z	PS	P
	N	B	B	M	B	B
	NS	B	B	M	B	B
	Z	S	M	M	M	S
	PS	M	M	S	M	M
	P	S	S	M	S	S

The input signal of the real variables is first fuzzified, then the control tables are built according to the knowledge database of the BLDC motor parameters for all operating conditions. Therefore, in the output control signal of the proposed FL method is used for the PI anti-wind controller with back calculation. The schematic block structure of this controller is shown in Figure 5

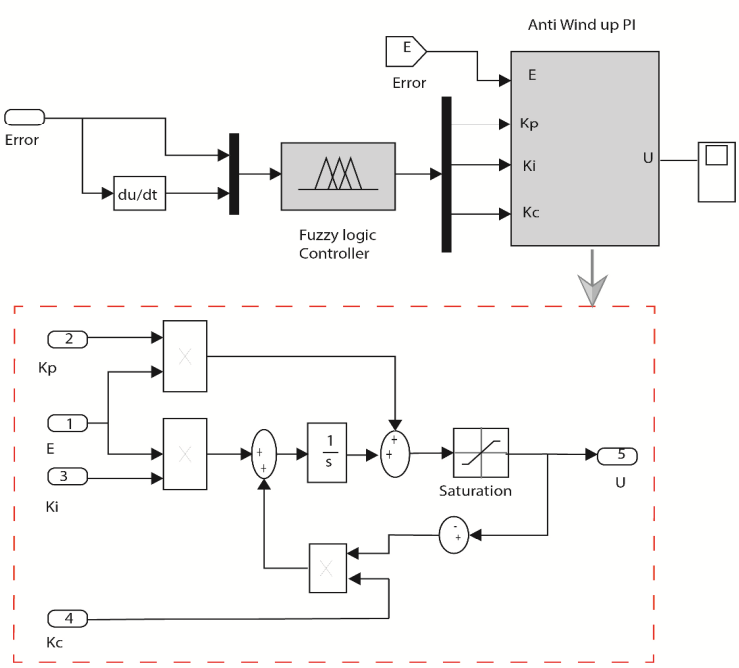

Fig.5. Architecture of self-adaptive PI anti wind up controller.

.

4. Simulation Result and Analysis

The PI anti wind up –based the back calculation method and adaptive fuzzy PI anti-wind up control systems which have been designed previously in order to obtain an optimal control strategy, will be simulated using several conditions such as variable condition in empty and loaded conditions and operating conditions as well as variable Set Point Speeds. The results obtained were carried out using the Matlab/Simulink software.

4.1. Simulink Model Development and Self Adaptive Controller

Fig 6 shows the system block which includes the BLDC motor model, an inverter, a self-adaptive controller, and PWM switching. So the actual speed of the BLDC motor will be compared with the reference speed to get the error and change in error values which are the inputs to this control system .

Figure 7 shows the gain value of the online FL control for kp, ki and Kc. Thus, it is observed that the parameters change with the operating conditions.

Figure 8 shows the simulation results of the torque and phase current waveforms under the BLDC motor operating conditions. Under the same scenario, acceptable ripples appeared on the torque curves of the motor. It is observed that the current values change with the torque value.

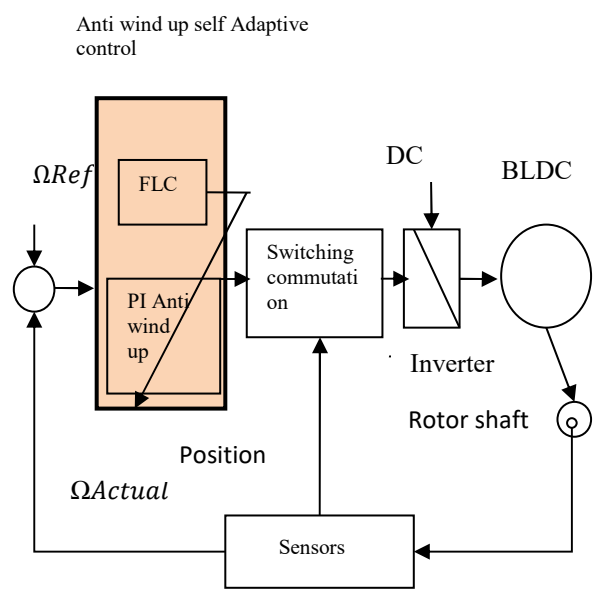

Fig.6. Simulink block of self adaptive PI anti wind up control.

BLDC motor simulation is performed using MATLAB/SIMULINK software. The motor will be speed controlled by a three-phase inverter controlled by pulse width modulation (PWM). The latter is one of the most used control techniques to control the speed of the motor. The parameters used in the simulation are mentioned in the Table 2 below.

TABLE 2: Parameters of BLDC motor drive.

Authorized licensed use limited to: Rajshahi University Of Engineering and Technology. Downloaded on April 24,2026 at 19:24:38 UTC from IEEE Xplore. Restrictions apply.

Viscous friction coefficient	f= 0.005(N.m.s),
Rotor inertia	J= 0.089 (kg.m^2)
Number of pole-pairs	P= 4,
Phase resistance	R=0.2 (ohm),
Phase Inductance	L= 8.5e-3 (H)
Torque Constant	T= 1.4 (Nm/A)
Load torque	TR=10 (N.m)

(a)

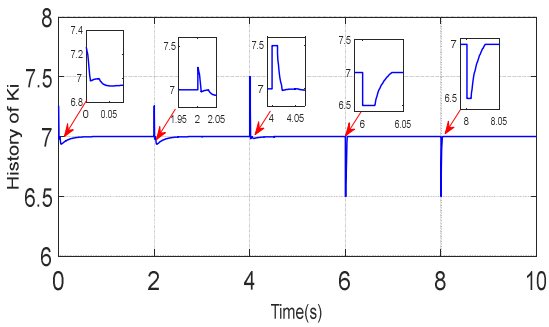

(b)

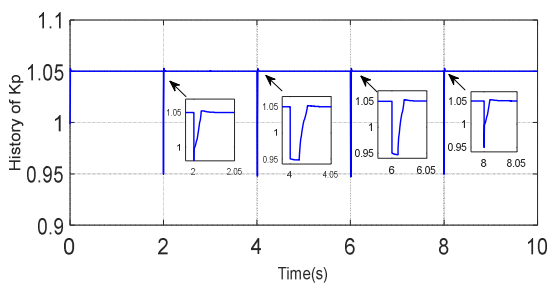

(c)

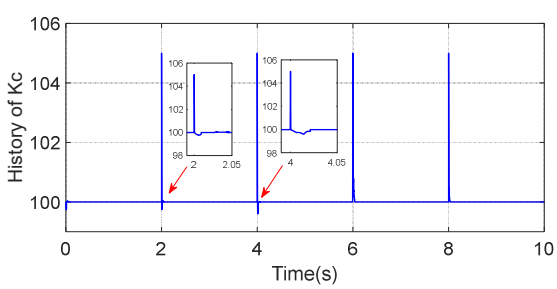

Fig.7. FL control, (a) online value of gain for kp, (b) online value of gain for ki and (c) online value of gain for kc.

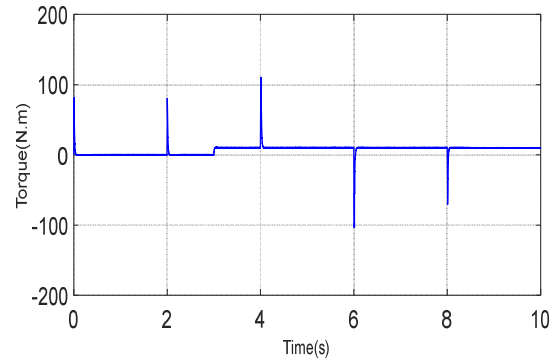

(b)

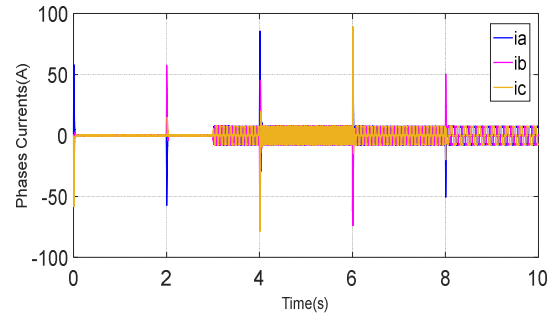

Fig.8.Brushless dc motor reponce, (a) torque waveforme ,(b) phase current waveforms.

4.2 RESULT UNDER REFERENCE SPEED VARIATION CONDITION

To evaluate the performance provided by the proposed controller, the closed-loop system of the brushless DC motor is operated with the load deviation and variation of reference speed.

In the first case, the pitch reference speed increases; it varies from 100 rad/s to 200 rad/s at t=2s and from 200 rad/s to 400 rad/s at t=4s. Then in the second part the reference speed begins to decrease from 400rad/s to 200rad/s at t=6s and from 200 to 100 rad/s at t= 8s.

The idea was to have a reference speed trajectory rich in information.

Fig.9 shows the speed behavior for a variable speed set point. From this figure, we could observe weak oscillation of the speed curve following the application of each of the three controllers already, and we also notice that the rotor speed perfectly follows its speed reference but with some differences according to the type of controller applied.

Indeed, for a sudden change in the set point the three controllers give almost the same operating dynamics as shown in figure 9 but of the response is remarkably attenuated for the anti-windup self-adaptive Fuzzy- PI controller.

Two operating intervals are considered in this work, the first one is [4s 6s] in which we can determine the overshoot, undershoot, the convergence time and the sate steady error for each controller response and this will be recorded in table 3, the same work is done for the second interval [6s 8s] the results will be presented in table 4.

The system is loaded at 3s as in extract 3. The performance parameters are acceptable for the proposed controller.

Authorized licensed use limited to: Rajshahi University Of Engineering and Technology. Downloaded on April 24,2026 at 19:24:38 UTC from IEEE Xplore. Restrictions apply.

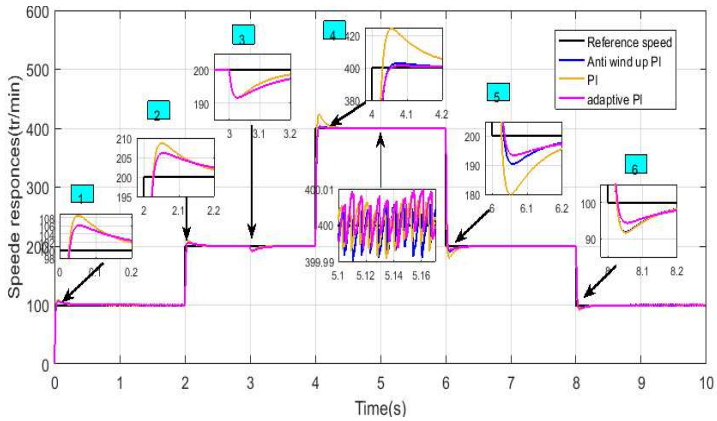

Fig.9.Speed responces for reference speed variation of BLDC MOTOR

TABLE 3: COMPARISON OF PERFORMANCE PARAMETERS FOR FIRST CAS

4s to 6s	Performance parameters			
Controller	Rise time(s)	Over shoot Value(%)	Setting time(s)	Steady state error(rad/s)
PI	0.082	6.075	0.167	0.1428
Anti Wind up PI	0.030	0.725	0.037	0.02263
Self-adaptive controller	0.03	0.325	0.037	0.061

TABLE 5: COMPARISON OF PERFORMANCE PARAMETERS FOR SECOND CASE

6s to 8s	Performance parameters			
Controller	Rise time(s)	Undershoot (%)	Setting time (s)	Steady state error(rad/s)
PI	0.126	10.055	0.146	0.0027
Anti Wind up PI	0.028	4.70	0.146	0.0011
Self-adaptive controller	0.028	3.25	0.208	0.0013

5. CONCLUSION:

In this article we have studied three techniques of control applied to the brushless direct current motor (BLDC): anti-windup self-adaptive PI-Fuzzy with back-calculation method, a classical proportional-integral (PI) controller and an anti-windup PI controller.

The simulation results of this models show that these techniques are robust against load change.

The anti-windup-self-adaptive PI-Fuzzy controller has an advantage against the other proposed controller. It has improved the performance controller parameters.

However, the digital performance values of the PI anti wind controller are better, such as stabilization time, than those of other proposed controllers as in extracted 4 and 5 from figure9.

The world is becoming aware of the problems associated with traditional energy sources such as fossil fuels and non-renewable energy sources. Fuel cells (FC) can be applied as a potential alternative energy for brushless DC motor. Thus, this technology is reserved for the future work.

REFERENCES

[1] Jouili, Y., Youssef, M. A. B., Hamed, B., & Sbita, L. (2021, October). Brushless DC motor fed by PEM fuel cell stack for mini UAV's. In *2021 12th International Renewable Energy Congress (IREC)* (pp. 1-6). IEEE

[2] REDDY, H., & SHARMA, S. (2021). Implementation of Adaptive Neuro Fuzzy Controller for Fuel Cell Based Electric Vehicles. *Gazi University Journal of Science*, *34*(1), 112-126

[3] Kumar, K., Tiwari, R., Varaprasad, P. V., Babu, C., & Reddy, K. J. (2021). Performance evaluation of fuel cell fed electric vehicle system with reconfigured quadratic boost converter. *International Journal of Hydrogen Energy*, *46*(11), 8167-8178

[4] Vasantharaj, S., Indragandhi, V., Subramaniyaswamy, V., Teekaraman, Y., Kuppusamy, R., & Nikolovski, S. (2021). Efficient Control of DC Microgrid with Hybrid PV—Fuel Cell and Energy Storage Systems. *Energies*, *14*(11), 3234.

[5] Harrag, A., & Rezk, H. (2021). Indirect P&O type-2 fuzzy-based adaptive step MPPT for proton exchange membrane fuel cell. *Neural Computing and Applications*, *33*(15), 9649-9662.

[6] Song, B., Xiao, Y., & Xu, L. (2020). Design of fuzzy PI controller for brushless DC motor based on PSO–GSA algorithm. *Systems Science & Control Engineering*, *8*(1), 67-77.

[7] Khaniki, M. A. L., Esfandiari, S., & Manthouri, M. (2020, October). Speed Control of Brushless DC motor using Fractional Order Fuzzy PI Controller Optimized via WOA. In *2020 10th International Conference on Computer and Knowledge Engineering (ICCKE)* (pp. 431-436). IEEE.

[8] Yigit, T., & Celik, H. (2020). Speed controlling of the PEM fuel cell powered BLDC motor with FOPI optimized by MSA. *International Journal of Hydrogen Energy*, *45*(60), 35097-35107

[9] Gadekar, K., Joshi, S., & Mehta, H. (2020, July). Performance Improvement in BLDC Motor Drive Using Self-Tuning PID Controller. In *2020 Second International Conference on Inventive Research in Computing Applications (ICIRCA)* (pp. 1162-1166). IEEE

[10] Suryoatmojo, H., Pratomo, D. R., Soedibyo, M. R., Riawan, D. C., Setijadi, E., & Mardiyanto, R. (2020). Robust speed control of brushless dc motor based on adaptive neuro fuzzy inference system for electric motorcycle application. *International Journal of Innovative Computing Information and Control*, *16*(2), 415-428

[11] Devi Vidhya, S., & Balaji, M. (2020). Hybrid fuzzy PI controlled multi-input DC/DC converter for electric vehicle application. *Automatika*, *61*(1), 79-91.

[12] Reddy, K. J., & Sudhakar, N. (2019). ANFIS-MPPT control algorithm for a PEMFC system used in electric vehicle applications. *International Journal of Hydrogen Energy*, *44*(29), 15355-15369

[13] Verma, V., & Chauhan, S. (2019, June). Adaptive PID-fuzzy logic controller for brushless DC motor. In *2019 3rd International Conference on Electronics, Communication and Aerospace Technology (ICECA)* (pp. 445-449). IEEE

[14] control of brushless direct current motor using a genetic algorithm–optimized fuzzy proportional integral differential controller. *Advances in Mechanical Engineering*, *11*(11), 1687814019890199Hu, H., Wang, T., Zhao, S., & Wang, C. (2019). Speed

[15] SARIKAYA, M. S., & DERDİYOK, A. (2019, October). Speed Control of Brushless Direct Current Motor with Fuzzy Resetting Rate PI Controller. In *2019 3rd International Symposium on Multidisciplinary Studies and Innovative Technologies (ISMSIT)* (pp. 1-4). IEEE.

[16] Tahoun, A. H. (2017). Anti-windup adaptive PID control design for a class of uncertain chaotic systems with input saturation. *ISA transactions*, *66*, 176-184

[17] Premkumar, K., & Manikandan, B. V. (2015). Fuzzy PID supervised online ANFIS based speed controller for brushless dc motor. *Neurocomputing*, *157*, 76-90.

Authorized licensed use limited to: Rajshahi University Of Engineering and Technology. Downloaded on April 24,2026 at 19:24:38 UTC from IEEE Xplore. Restrictions apply.